maxon | Kwapil & Co

Brushless Motor
ECMAX22L

The advantages :
Servo motor - High rotation speed and fast acceleration - Reduced dimensions and high torque

Associated products :

> Power supply
DR-120-24
DR-30-12 / 24
DR-60-24
DRP-240-24
DRP-480S-24
RS-100-24
RS-150-24
RS-75-24
SP-320-24

> Controller
EPOS2P 24/5
ESCON 50/5
ESCON 70/10
NANO BLDC

maxon motor 25 W - 42 W

Power supply voltage (Ua)	V	24
Speed at current In	tr/mn	10400
Torque at current In	mNm	22.5
Maximum permanent current In	mA	1400
Ua no-load speed +/- 10%	tr/mn	12900
No-load current +/- 50%	mA	121
Ua stall current	mA	6970
Ua stall torque	mNm	121
Torque constant	mNm/A	17.4
Speed constant	tr/mn/V	549
Speed/torque gradient	tr/mn/mN	109
Limit speed	tr/mn	18000
Maximum Ua operating power	W	40.9
Maximum efficiency	%	76
Electromechanical time constant	ms	5.06
Inertia	gcm²	4.45
Terminal resistance phase to phase	Ohm	3.44
Inductance	mH	0.182
Ambient/Housing thermal	K/W	10.2
Coil/Housing thermal resistance	K/W	1.02
Coil thermal time constant	s	1.97
Housing thermal time constant	s	628
Test voltage	V	24
Ambient temperature	°C	25
Nominal operating power output	W	24.5
Max permanent operating power	W	42.4

Commutation	Electronic
Number of phases	3
Bearings	Roulements préchargés
Magnets	NdFeB
Maximum axial load (dynamic)	4.5 N
Maximum radial load	16 N
at a distance from the face of:	5 mm
Maximum slip force (static)	1000 N
Minimum ambient operating temperature	-40 °C
Maximum ambient operating temperature	+100 °C
Maximum coil temperature	155 °C
Weight	124 g

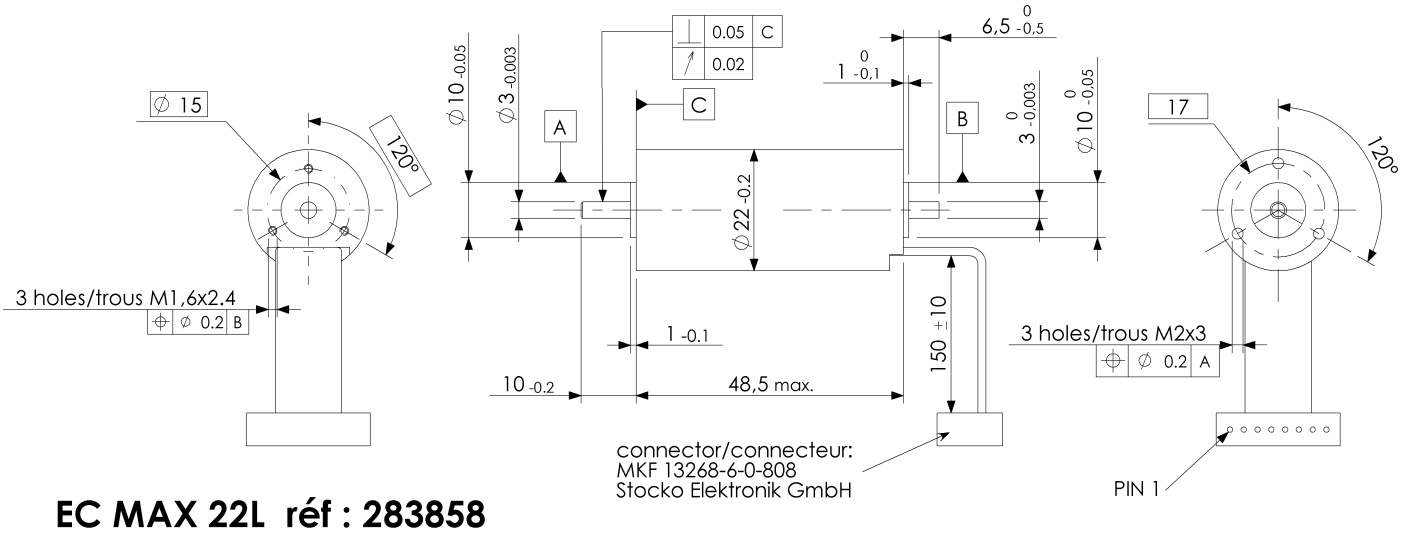

EC MAX 22L réf : 283858

EditionJuli 2022 / subject to modification

Version of06/07/2022