maxon | Kwapil & Co

Geared Stepper Motor
LMD34/PM72 CanOpen IP65

électronique intégrée
compatible AtoM8

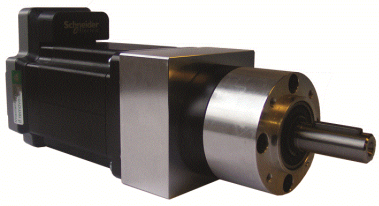

The advantages :
Integral axis motion controller positioning motor with 1000-point encoder - Configurable I/O - CANopen BUS - M12 connector - no-step losses integrated - Torque Mode. See instructions. 4-Year

Associated products :

> Power supply
DR-120-24
DRP-240-48

mdp 14 Nm - 84 Nm

Version	Reduction ratio	Number of stages	Efficiency	Step angle (°)	Holding Torque (Nm)	Rated Torque / Phase (A)	Inertia (g.cm²)
LMDCA853C/0004	3.7	1	0.80	0.49	14.00	4.00	2700
LMDCA853C/0016	15.88	2	0.75	0.11	42.00	4.00	2700
LMDCA853C/0107	107	3	0.70	0.017	84.00	4.00	2700

Protection	IP65
Reduction gear type	planetary
Bearings	ball bearings 2RS
Gears fabricated from:	Delrin-Acier
input stage	Delrin
output stage	Steel
Maximum axial load	100 N
Maximum radial load	320 N
Angular play under no load	0.60 °
Angular play under load	0.60 °
Maximum input speed	3000 tr/mn
Max ambient operating temperature	140 °C
Reduction gear min temperature	-30 °C
Reduction gear max temperature	+140 °C
Motor min temperature	-20 °C
Motor maximum temperature	50 °C

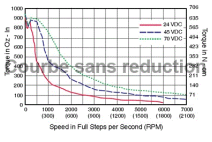

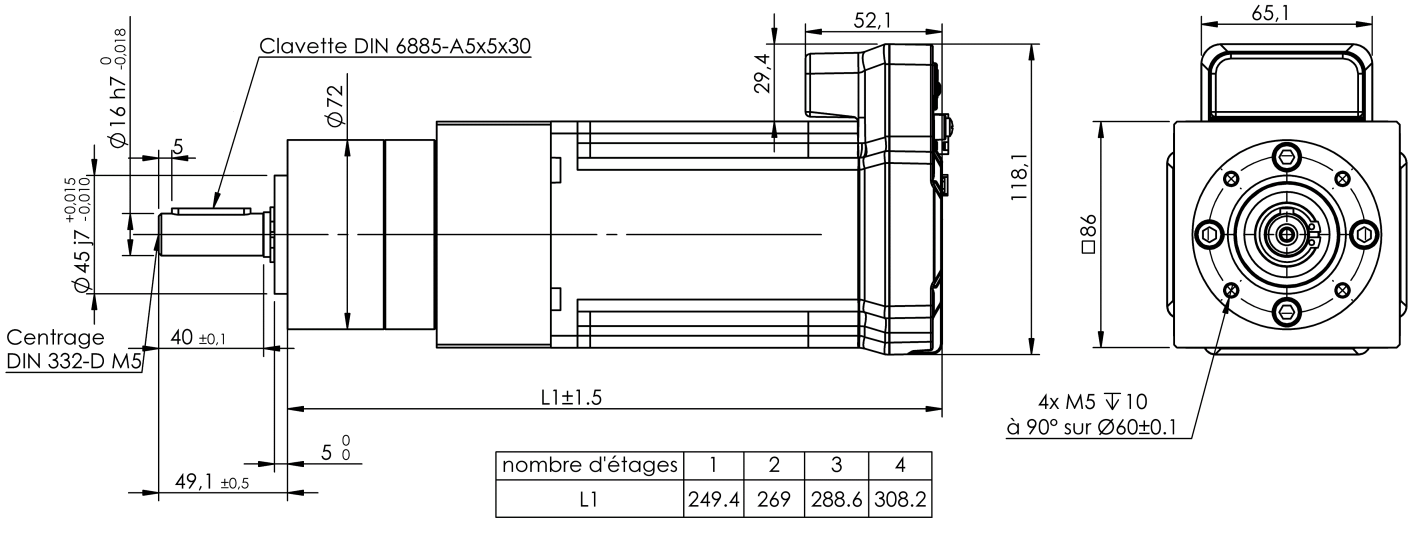

nombre d'étages	1	2	3	4
L1	249.4	269	288.6	308.2

EditionJuli 2022 / subject to modification

Version of06/07/2022